REVISIONS

DATE	COMMENTS

ISSUE DATE: OCTOBER 2018

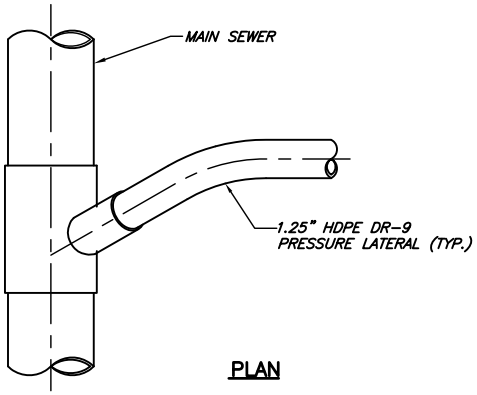

PLAN

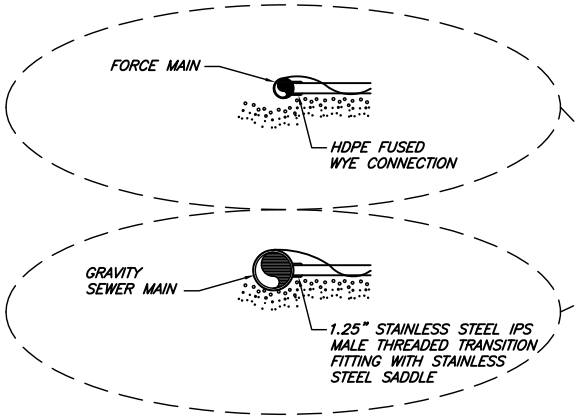

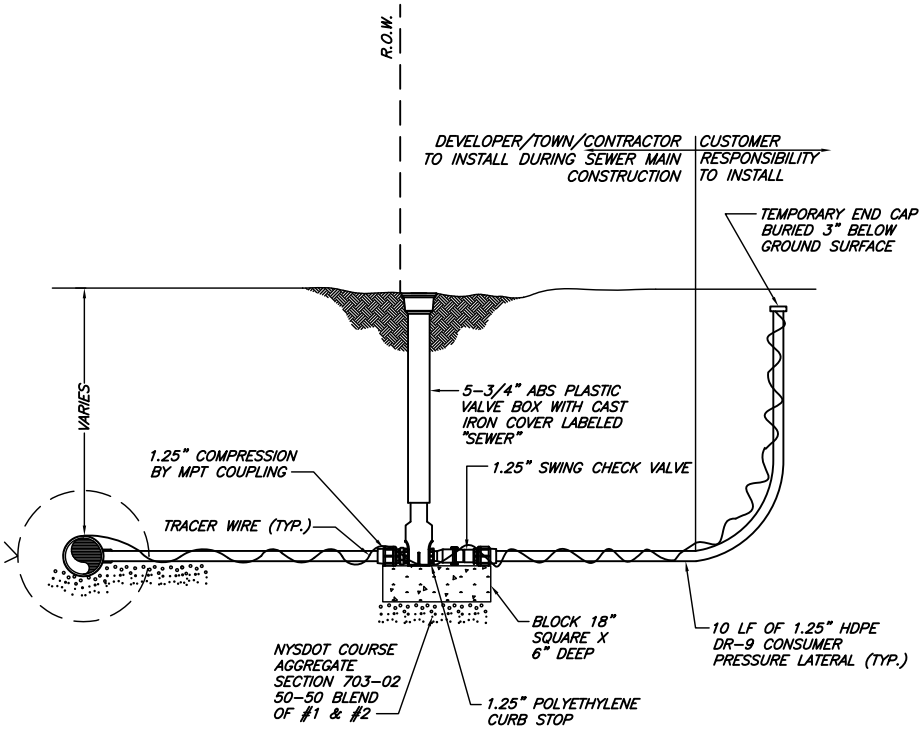

SECTION

TYPICAL RESIDENTIAL PRESSURE LATERAL CONNECTION

N.T.S.

NOTES:
1. NO BRASS OR IRON ALLOWED.
2. REFER TO MATERIAL LIST, S-03.

TOWN OF BATAVIA

SANITARY SEWER DETAILS

PRESSURE LATERAL CONNECTION: MAIN TO CURB BOX

DRAWING S-22A